RGC (ООО «РОССИ») – единственный официальный представитель компании Rossi S.p.A. на территории Российской Федерации и стран Таможенного Союза

Email: **info@rgc-group.ru**

Тел.: **8 (831) 410-35-45**

www.rgc-group.ru

PB series

Parking brakes

Spring Applied Hydraulic Released

multi-disc brakes

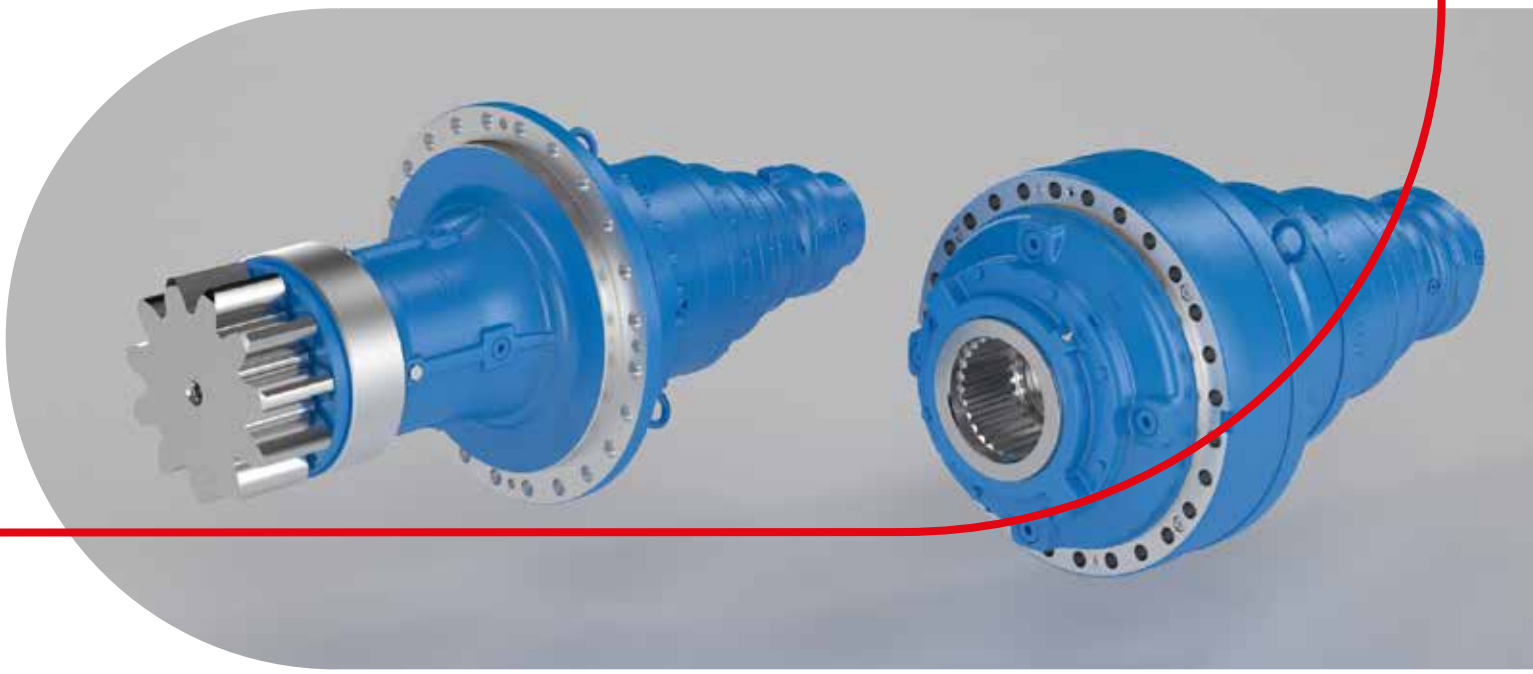

Features and Benefits

Compact design

Drastically decreased rotational inertia as compared to typical caliper brake systems

Direct coupling with standard "U" flanges

Most of the hydraulic motor flanges, NEMA electric motors and U-IEC available as standard

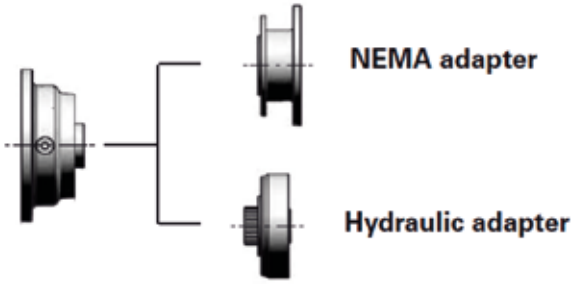

Modularity

On the same housing, wide range of braking torque

PB90 possibility to install behind a reduction stage

Customizable braking torque

Possibility to adjust braking torque within a set range

Wider braking torque available on Customer request to optimize the design

Totally enclosed

Ideal for out-door operation and sparking free

Thorough quality control
Thorough material testing
Product tested at the end of the assembly line

Safety

High quality and reliability standards

Designation

Gear reducer size and ratio

R	3EL	018A	61,3Y

TYPE OF RATIO

Y	catalog ratio
Z	non-standard ratio composition

TRANSMISSION RATIO [1)]

STAGE COMPOSITION [1)]

A	catalog stage composition
X	non-standard ratio composition

SIZE

001 ... 710

TRAIN OF GEARS – PLANETARY

1EL	1 stage in line		
2EL	2 stages in line	**2EB**	1 planet. and 1 bevel stage
3EL	3 stages in line	**3EB**	2 planet. and 1 bevel stage
4EL	4 stages in line	**4EB**	3 planet. and 1 bevel stage

MACHINE

Designation

Output — Brake — Input

C100M1 F10d PB10 - 0340 UH SA1 V1 ,...

ACCESSORIES

MOUNTING POSITION

B5, V1, V3 ...

SHAFT / COUPLING DIMENSIONS

INPUT

I	IEC electric motor adapter
C	cylindrical shaft end
V	cylindrical with fan
J	bevel shaft end
U	universal adapter
UN	Nema electric motor adapter
UH	hydraulic motor adapter

BRAKING TORQUE

BRAKE MODEL

PB10, PB30, PB90

OUTPUT MODEL

10, 20, 30 ...	model
a ... z	coupling dimensions

MOUNTING

F flange mounting **A** shaft mounting **P** foot mounting

OUTPUT SHAFT DIMENSIONS

38 ... 320	shaft diameter
M, I	metric / imperial system units
1 ... 9	model

SHAFT END

C	cylindrical	**S**	splined	**H**	hollow for shaft mounting	**X**	non-standard design
M	flanged	**K**	hollow with keyways	**Z**	splined hollow shaft		

This page is intentionally left blank

Features

The parking brakes of PB series are spring applied and hydraulic released multi-disc brakes, to be used in combination with planetary gear reducers of EP series.

They are not service brakes and they cannot be used in dynamic conditions.

They are used to hold the load from application or to stop the machine in case of emergency.

The values of static braking torque M_{Bstat} given in the following table should be considered as nominal values and are valid for a brand new brake with corret lubrication. Values of M_{Bstat} are given with a tolerance of ± 10%.

After some braking cycles, values of static braking torque could reduce by 5% and 10%, due to the adjustment of discs.

ATTENTION: always verify that the static breaking torque M_{Bstat} referred to the gear reducer low speed shaft is lower than the value of M_{2MAX} allowed by the gear reducer itself.

Effects on the thermal power of the gear reducer

Generally, in the running conditions required by normal applications where an hydraulically released brake is present, the thermal power of the gear reducer is not exceeded.

Nevertheless, under some running conditions (high speed, continuous or frequent duty, unfavorable mounting position like V1 and V3 or similar) it is possible that the normal brake operation generate a progressive overheating of the group, influencing the thermal power allowed by the gear reducer.

In these cases it is possible to adopt solutions to reduce overheating of the brake or increase the thermal power of the group by means of an integrated cooling system or an independent cooling unit.

Consult us for further information.

Speed limits

The presence of a SAHR brake does not limit the values of n_{1max} and n_{1peak} of the gear reducer stated in EP catalog.

ATTENTION: a continuous or frequent duty at high speed may generate an overheating of the group (previous paragraph).

Operating conditions

Brakes are designed for industrial applications, at ambient temperature -20 °C ÷ + 50 °C, maximum altitude 1000 m. For operation at temperatures from -20 °C to 0 °C limit p_{max} to 200 bar.

Technical data

PB10-...			0075	0150	0225	0340	0420	0525	0650	0815	
Static braking torque	M_{Bstat}	[N m]	72	156	224	345	421	531	660	818	
Min release pressure	p_{min}	[bar]	4,4	9,5	10,2	15,7	15,4	19,4	20,1	24,9	
Release pressure	p	[bar]	6,9	14,9	16,1	24,7	24,2	30,4	31,6	39,1	
Max. release pressure	p_{max}	[bar]	300								
Maximum speed	n_{1max}	[min^{-1}]	According to gear reducer n_{1max} and n_{1peak}								
Oil volume for brake release	V	[l]	0,10								

PB30-...			0250	0400	0500	0630	0800	1000	1250	1500	1700
Static braking torque	M_{Bstat}	[N m]	265	407	509	637	809	1010	1281	1529	1741
Min release pressure	p_{min}	[bar]	7,6	11,8	11,8	14,7	15,6	19,4	24,7	25,2	28,7
Release pressure	p	[bar]	12,0	18,5	18,5	23,1	24,5	30,5	38,7	39,6	45,1
Max. release pressure	p_{max}	[bar]	300								
Maximum speed	n_{1max}	[min^{-1}]	According to gear reducer n_{1max} and n_{1peak}								
Oil volume for brake release	V	[l]	0,12								

PB90-...			0850	1250	1500	1800	2100	2600	3000	3550	4250
Static braking torque	M_{Bstat}	[N m]	869	1304	1552	1811	2173	2680	3063	3560	4305
Min release pressure	p_{min}	[bar]	10,2	15,3	18,2	18,2	21,9	27,0	27,0	31,4	37,9
Release pressure	p	[bar]	15,3	23,0	27,4	27,4	32,8	40,5	40,5	47,1	56,9
Max. release pressure	p_{max}	[bar]	300								
Maximum speed	n_{1max}	[min^{-1}]	According to gear reducer n_{1max} and n_{1peak}								
Oil volume for brake release	V	[l]	0,25								

Different braking torques on request.
Max back pressure allowed 0,5 bar.

Brake closed

When no pressure is applied to the brake (0 bar) springs (1) apply a force to the piston (2) which lock the discs (3) and produce a nominal braking torque equivalent to $\boldsymbol{M}_{Bstat}$.

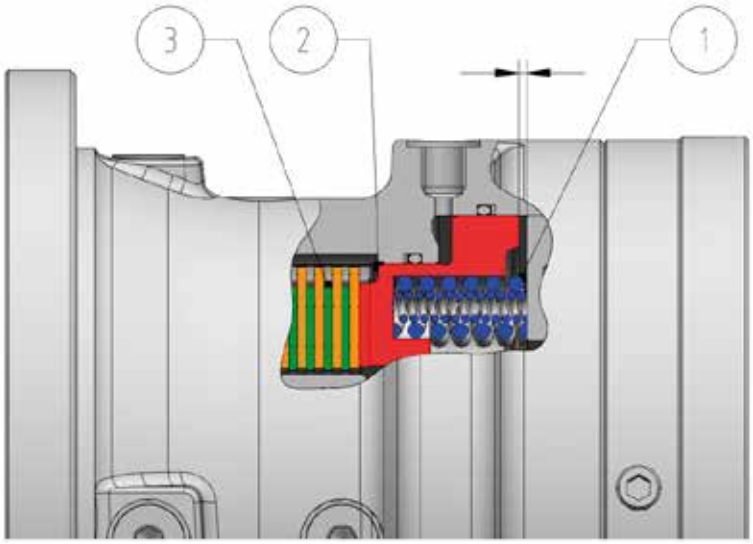

Brake opened

Above the pressure of 0 bar, the piston begins to compress the springs and the brake progressively reduces the braking torque.

When the release pressure exceeds the value of $\boldsymbol{p}_{min}$ the brake begins to open; once reached the value $\boldsymbol{p}$ the brake is fully opened, the piston ends its displacement and the discs can rotate freely.

To ensure a long life of the brake, it is suggested to use a release pressure 50% above the value of $\boldsymbol{p}$ and in any case not higher than $\boldsymbol{p}_{max}$.

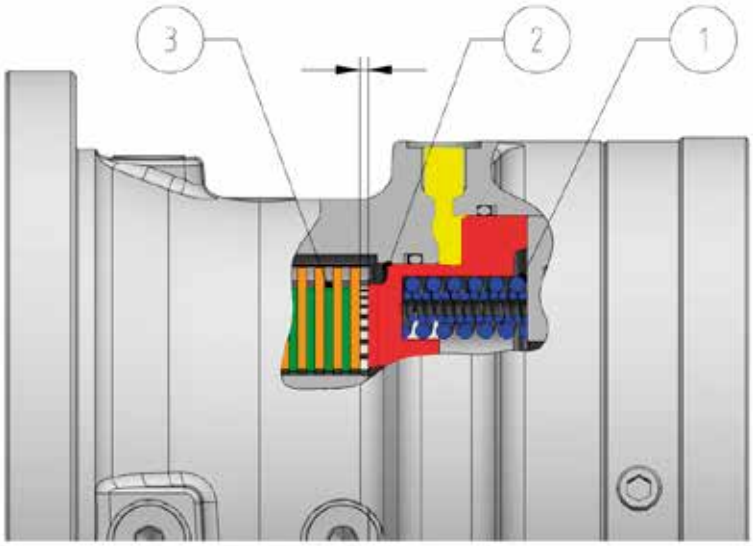

PB10 (001/002/C125/C160)

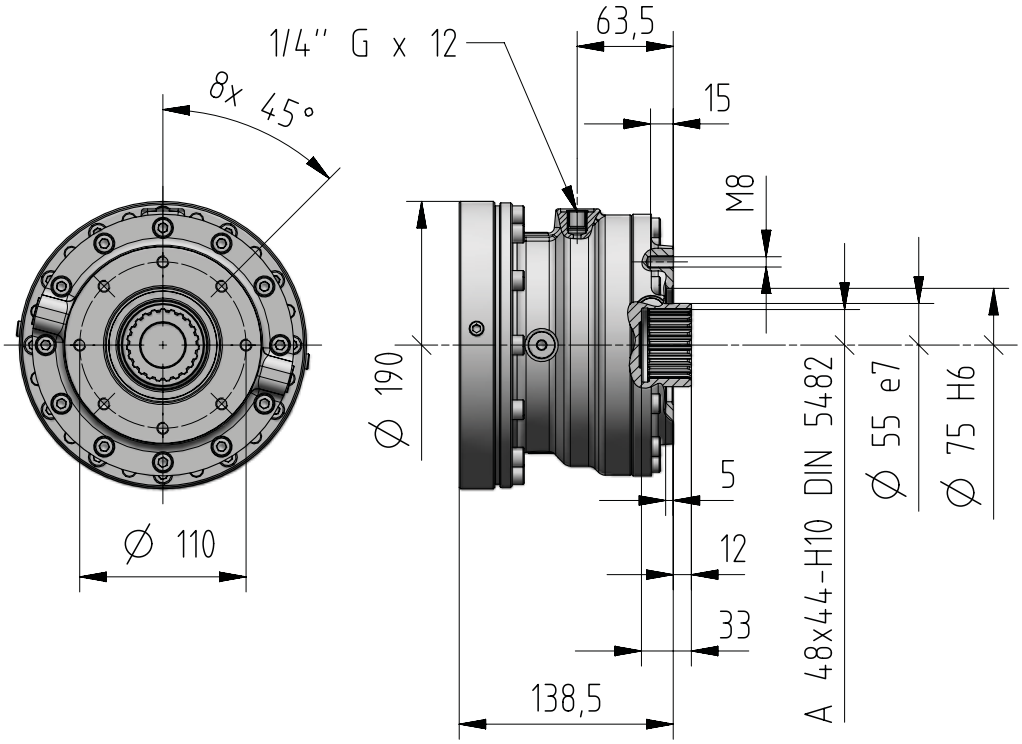

1EL	2EL	3EL	4EL	2EB	3EB	4EB	Mass [kg]
001A, 002A	001A…006A	001A…022A	001A…061A	001A…006A	001A…022A	001A…061A	18

PB10 (003/004/006/C200)

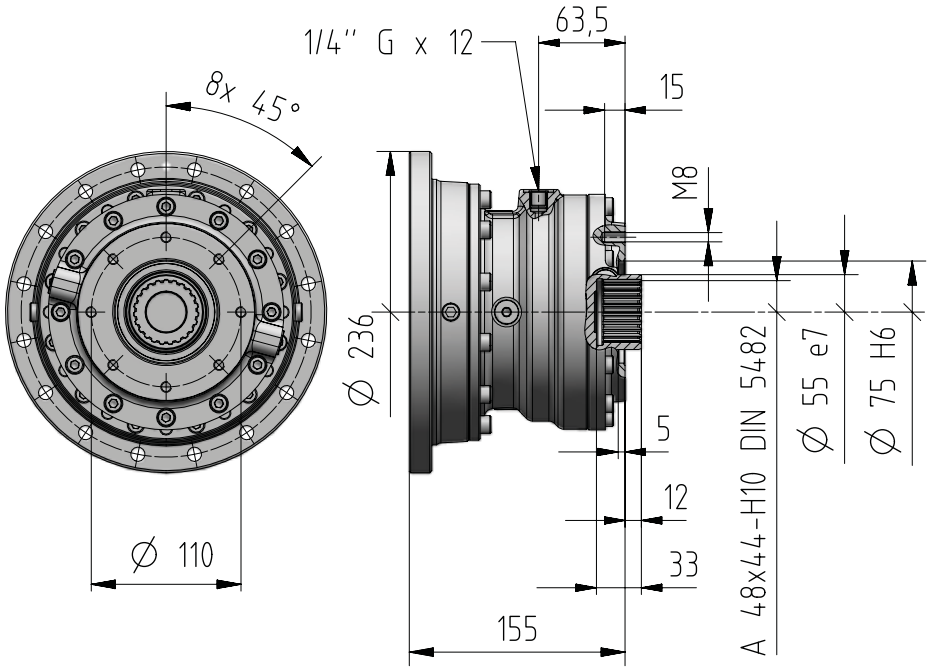

1EL	2EL	3EL	4EL	2EB	3EB	4EB	Mass [kg]
003A…006A	009A…022A	030A…061A	085A…180A	009A…015A, 022A	030A…043A	085A…125A	20

Input side details

PB30 (003/004/006/C200)

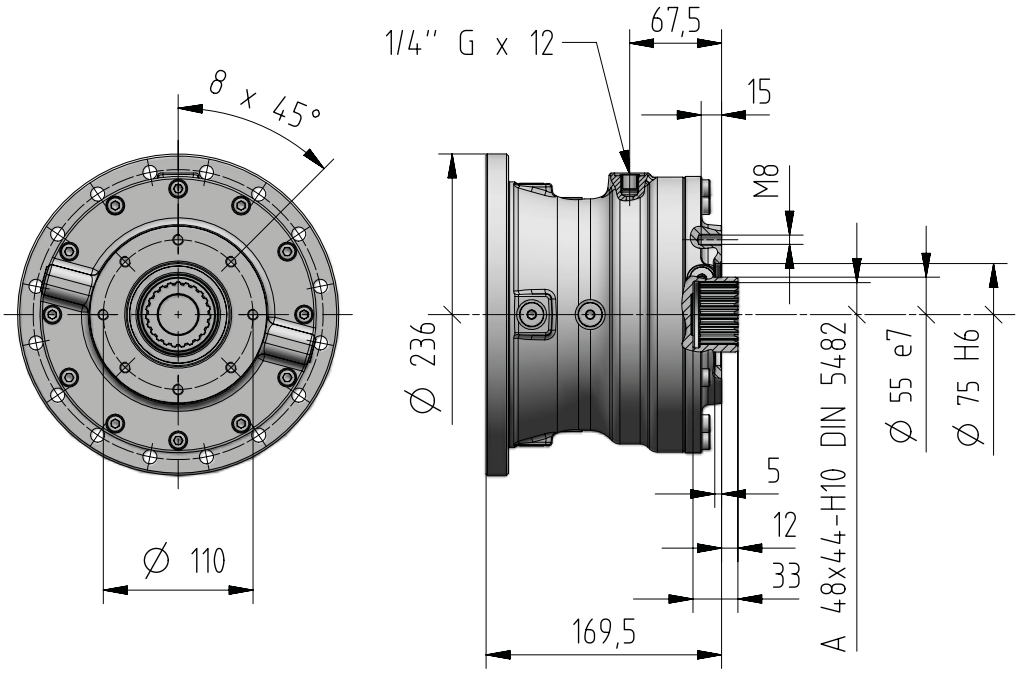

1EL	2EL	3EL	4EL	2EB	3EB	4EB	Mass [kg]
003A…006A	009A…022A	030A…061A	085A…180A	009A…015A, 022A	030A…043A	085A…125A	25

PB90 (009/012/015/C250)

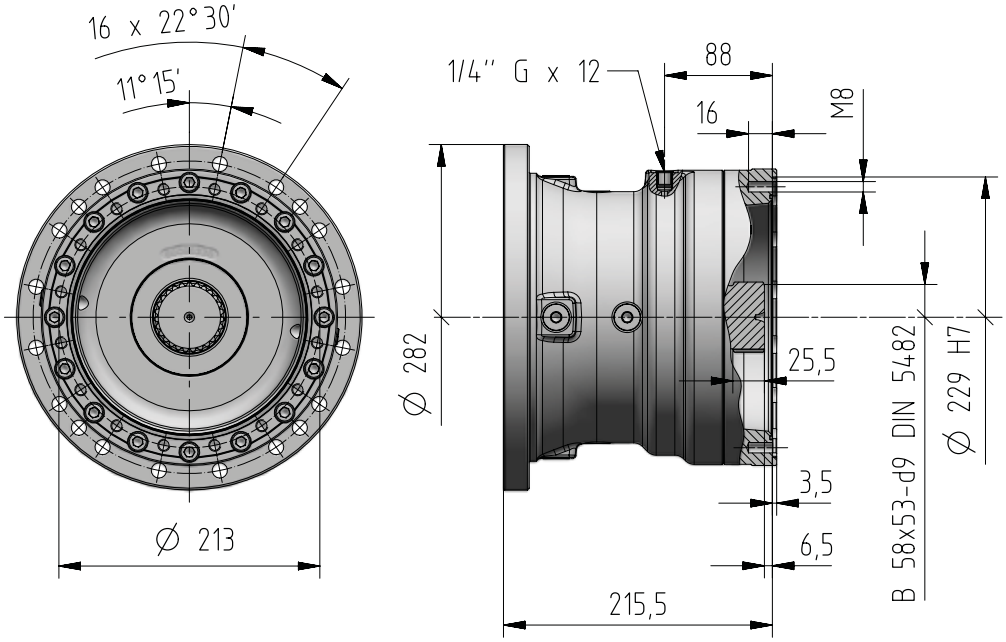

1EL	2EL	3EL	4EL	2EB	3EB	4EB	Mass [kg]
009A…015A	030A…043A	085A…125A	250A, 355A	018A, 021A, 030A	060A…085A	180A, 250A	53

Mounting positions and oil quantities

PB10 (001/002/C125/C160)

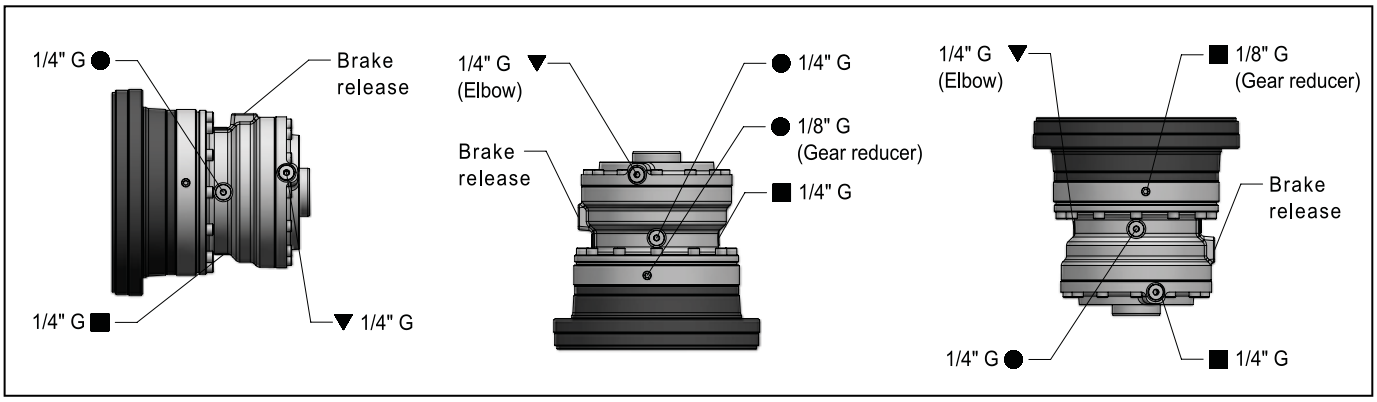

							Oil quantities		
1EL	**2EL**	**3EL**	**4EL**	**2EB**	**3EB**	**4EB**	**B5**	**V1**	**V3**
001A, 002A	001A…006A	001A…022A	001A…061A	001A…006A	001A…022A	001A…061A	0,09	0,06	0,16

PB10 (003/004/006/C200)

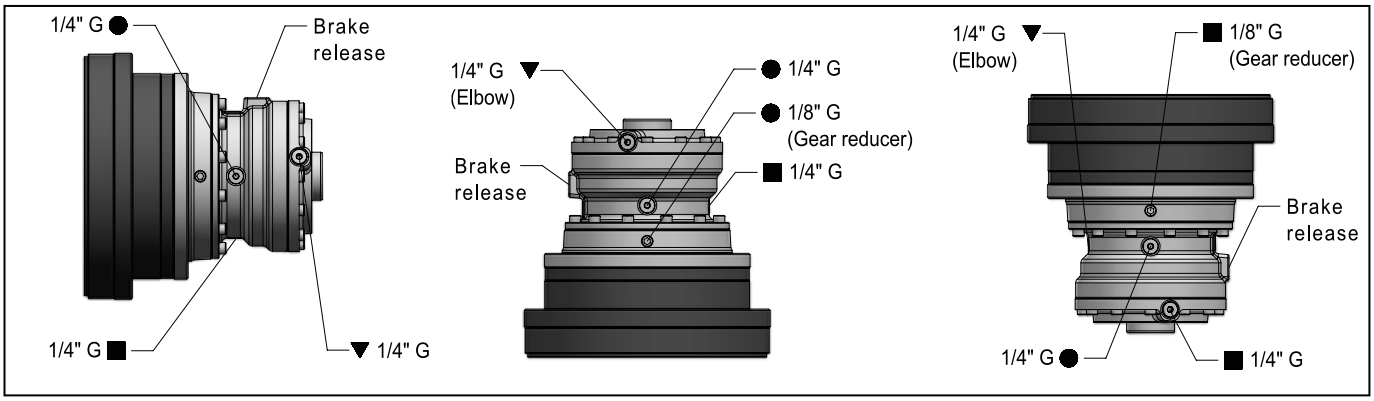

							Oil quantities		
1EL	**2EL**	**3EL**	**4EL**	**2EB**	**3EB**	**4EB**	**B5**	**V1**	**V3**
003A…006A	009A…022A	030A…061A	085A…180A	009A…015A, 022A	030A…043A	085A…125A	0,09	0,06	0,16

Mounting positions and oil quantities

PB30 (003/004/006/C200)

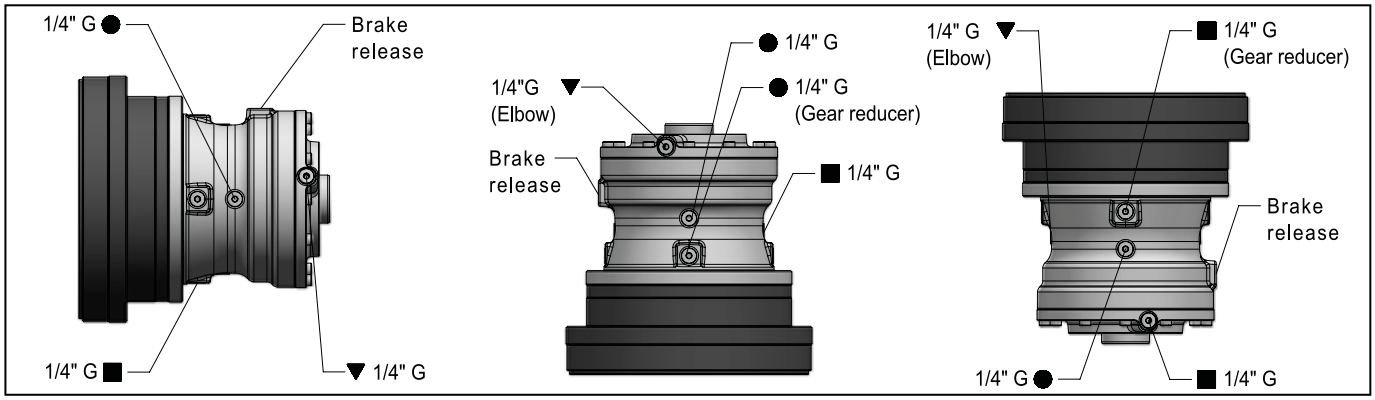

							Oil quantities		
1EL	**2EL**	**3EL**	**4EL**	**2EB**	**3EB**	**4EB**	**B5**	**V1**	**V3**
003A…006A	009A…022A	030A…061A	085A…180A	009A…015A, 022A	030A…043A	085A…125A	0,36	0,18	0,67

PB90 (009/012/015/C250)

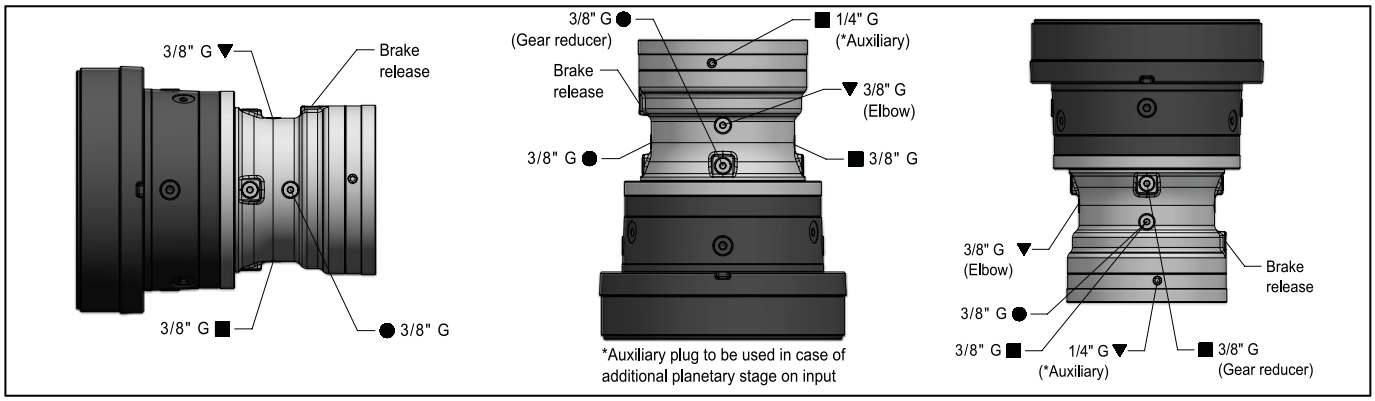

							Oil quantities		
1EL	**2EL**	**3EL**	**4EL**	**2EB**	**3EB**	**4EB**	**B5**	**V1**	**V3**
009A…015A	030A…043A	085A…125A	250A, 355A	018A, 021A, 030A	060A…085A	180A, 250A	0,48	0,24	0,90

Oli quantity [l]

For mounting position B5 the exact oil quantity the parking brake is to be filled with is definitely given by the level.

For mounting positions V1, V3 the oil quantities stated in the tables must be followed.

How supplied

Name plate

Every brake is provided with a name plate in anodized aluminium containing main information necessary for a correct identification of the product; the name plate must not be removed and must be kept integral and readable. All name plate data must be specified on eventual spare part orders.

Lubrication

PB series brakes **require lubrication** and are supplied **without oil**, as specified by the relevant adhesive label. Before putting the brakes into service fill them with mineral oil ISO VG 32, unless otherwise prescribed by specific documentation. Hydraulic oils are generally suitable.
The separate lubrication prevents premature lubricant contamination in the gear reducer, increaasing gears and bearings life.

Commissioning

Brake feeding

To feed the brake it is recommended the use of mineral-based hydraulic oil; synthetic oils may damage and cause malfunctions in the brake.
Connect a fitting of the system hydraulic circuit to the brake release hole.
Before first use it is necessary to bleed. Slightly loosen the fitting on the release hole, keeping the pressure until all air has been bled, then tighten again the fitting.

Every decision we make at Rossi impacts the world we live in. But new technologies and renewed commitment to sustainable practices have provided us with the opportunity to make environmentally friendly printing decisions.
Our catalogs are printed on Forest Stewardship Council® (FSC®) certified paper [1].
This is our tangible commitment in terms of environment sustainability.

[1] The certification means that finished wood-based products in the marketplace have been handled by companies that have also been certified and that the paper has been handled in an environmentally-friendly manner.

Australia

Rossi Gearmotors Australia Pty. Ltd.
e-mail: info.australia@rossi-group.com
www.rossi-group.com/australia

Benelux

Rossi BeNeLux B.V.
e-mail: info.benelux@rossi-group.com
www.rossi-group.com/benelux

Brazil

Rossi do Brasil LTDA
e-mail: info.brazil@rossi-group.com
www.rossi-group.com/brazil

Canada

Rossi North America
e-mail: info.canada@rossi-group.com
www.rossi-group.com/canada

China

Rossi Gearmotors P.T.I. (Shanghai) Co., Ltd.
e-mail: info.china@rossi-group.com
www.rossi-group.com/china

France

Rossi Motoréducteurs SARL
e-mail: info.france@rossi-group.com
www.rossi-group.com/france

Germany

Rossi GmbH
e-mail: info.germany@rossi-group.com
www.rossi-group.com/germany

India

Rossi Gearmotors Pvt. Ltd.
e-mail: info.india@rossi-group.com
www.rossi-group.com/india

Malaysia

Rossi Gearmotors South East Asia Sdn Bhd
e-mail: info.malaysia@rossi-group.com
www.rossi-group.com/malaysia

Poland

Rossi Polska Sp.z o.o.
e-mail: info.poland@rossi-group.com
www.rossi-group.com/poland

Spain, Portugal

Rossi Motorreductores S.L.
e-mail: info.spain@rossi-group.com
www.rossi-group.com/spain

South Africa

Rossi Southern Africa
e-mail: info.southafrica@rossi-group.com
www.rossi-group.com/southafrica

Taiwan

Rossi Gearmotors Co. Ltd.
e-mail: info.taiwan@rossi-group.com
www.rossi-group.com/taiwan

Turkey

Rossi Turkey & Middle East
e-mail: info.turkey@rossi-group.com
www.rossi-group.com/turkey

United Kingdom

Rossi Gearmotors Ltd.
e-mail: info.uk@rossi-group.com
www.rossi-group.com/unitedkingdom

United States, Mexico

Rossi North America
e-mail: info.northamerica@rossi-group.com
www.rossi-group.com/northamerica

Global Service

Rossi S.p.A.
e-mail: aftersales@rossi-group.com

Product liability, application considerations

The Customer is responsible for the correct selection and application of product in view of its industrial and/or commercial needs, unless the use has been recommended by technical qualified personnel of Rossi, who were duly informed about customer's application purposes. In this case all the necessary data required for the selection shall be communicated exactly and in writing by the Customer, stated in the order and confirmed by Rossi. The Customer is always responsible for the safety of product applications. Every care has been taken in the drawing up of the catalog to ensure the accuracy of the information contained in this publication, however Rossi can accept no responsibility for any errors, omissions or outdated data. Due to the constant evolution of the state of the art, Rossi reserves the right to make any modification whenever to this publication contents. The responsibility for the product selection is of the customer, excluding different agreements duly legalized in writing and undersigned by the Parties.

Rossi S.p.A.

Via Emilia Ovest 915/A
41123 Modena - Italy
Phone +39 059 33 02 88
fax +39 059 82 77 74
e-mail: info@rossi-group.com
www.rossi-group.com

Registered trademarks
Copyright Rossi S.p.A.
Subject to alterations
Printed in Italy

drive different, drive Rossi